46 Mower Deck Assembly

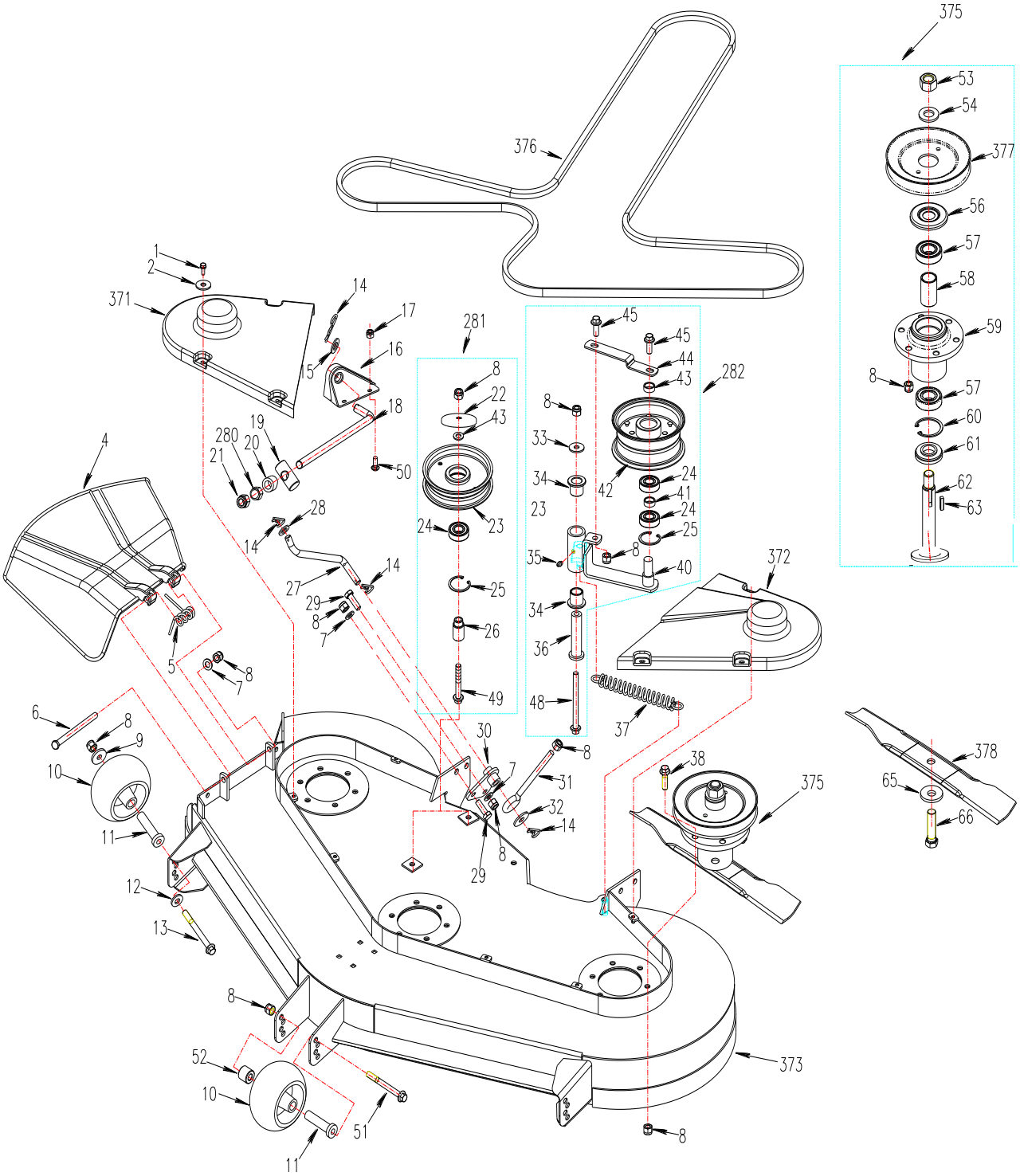

46 Mower Deck Assembly

REF.	PART NO.	DESCRIPTION	46	Quantity
1	B5783-616	Hex Hd. Bolt M6×16	×	6
2	B96-6	Washer M6	×	6
4	5001004	Discharge Chute	×	1
5	5001007	Torsion Spring	×	1
6	2802008	Bolt M8×160	×	1
7	B97.1-10	Flat Washer M10	×	5
8	B6182-10	Locknut M10	×	32
9	5201083	Washer M10	×	2
10	5201081	Anti Scalp Roller	×	3
11	5201082	Scalp Roller Bushing	×	3
12	5201061	Disk Spring Washer M11	×	2
13	B5782-10100	Bolt M10×100	×	2
14	5202012	Hair Pin	×	7
15	B97.1-14	Washer M14	×	1
16	5001130	Front Suspension Bracket	×	1
17	B6182-8	Locknut M8	×	4
18	5001010	Front Deck Support Rod	×	1
19	5001011	Support Rod Pivot Bushing	×	1
20	5001012	Support Rod Spacer	×	1
21	B6182-14	Nut M14	×	1
22	5201291	Bearing Cover	×	2
23	5201012	Stationary Idler	×	2
24	B276-6203RS	Bearing 6203-2RS	×	4
25	B893.1-40	Snap Ring M40	×	3
26	5201011	Idler Spacer Bushing	×	2
27	5001005	Deck Stabilizer Rod	×	2
28	B97.1-12	Flat Washer M12	×	2
29	B5783-1030	Hex Hd. Bolt M10×30	×	4
30	5001100	Deck Lift Bracket	×	2
31	5001008	Deck lift Rod	×	2
32	5001006	Washer M12	×	2
33	5001083	Washer M10	×	1
34	3301003	Flange Bushing 20×26×25	×	2
35	B1152-6	Grease Fitting M6	×	1
36	5001081	Pivot Tensioner Mount	×	1

REF.	PART NO.	DESCRIPTION	46	Quantity
37	5207015	Deck Belt Tension Spring	×	1
38	B5787-1035	Bolt M10×35	×	18
40	5001090	Deck Belt Tension Arm	×	1
41	5201077	Bearing Spacer	×	1
42	5201064	Tension Pulley	×	1
43	5201078	Bearing Spacer M10	×	1
44	5001082	Tension Pulley Brace	×	1
45	B5787-1025	Hex Hd. Bolt M10×25	×	2
48	B5787-10110	Bolt M10×110	×	1
49	B5787-1070	Hex Hd. Bolt M10×70	×	2
50	B801-825	Hex Hd. Bolt M8×25	×	4
51	B5787-10120	Hex Hd. Bolt M10×120	×	1
52	3602014	Deck Wheel Spacer	×	1
53	B6171-20	Nut M20×1.5	×	3
54	5201048	Disk Spring Washer M20	×	3
56	5201044	Top Dust Cover	×	3
57	B276-6205RS	Bearing 6205-2RS	×	6
58	5201049	Spindle Bearing Spacer	×	3
59	5201050	Spindle Housing	×	3
60	B893.1-52	Snap Ring M52	×	3
61	5201043	Lower Dust Guard	×	3
62	5001141	Spindle Shaft	×	3
63	B1096-B625	Key B6×25	×	3
65	5201042	Disk Spring Washer M16	×	3
66	B5785-161560	Bolt M16×1.5×60	×	3
280	B6172-14	Nut M14	×	1
281	5201010	Tension Pulley Assembly	×	2
282	5001080	Tension Pulley Assembly Drive Belt	×	1
371	4601119	Right Belt Pulley Safety Guard	×	1
372	4601120	Left Belt Pulley Safety Guard	×	1
373	4601040	Deck Weldment	×	1
375	4601140	Spindle Assembly	×	3
376	4601002	Blade Drive Belt	×	1
377	4601110	Blade Pulley	×	3
378	4601001	Blade	×	3

50 Mower Deck Assembly

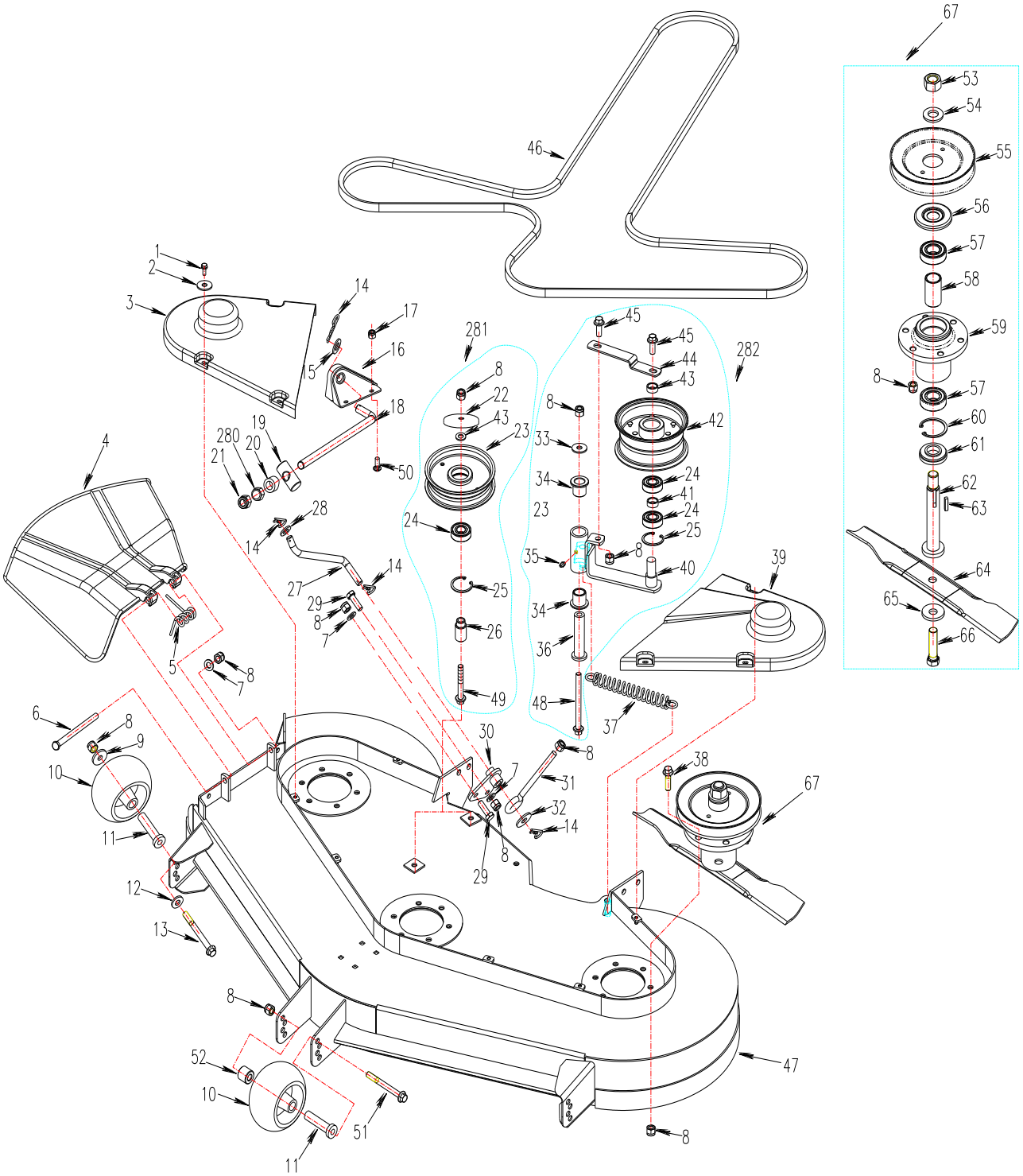

50 Mower Deck Assembly

REF.	PART NO.	DESCRIPTION	50	Quantity
1	B5783-616	Hex Hd. Bolt M6×16	×	6
2	B96-6	Flat Washer M6	×	6
3	5001016	RH Belt Cover	×	1
4	5001004	Discharge Chute	×	1
5	5001007	Torsion Spring	×	1
6	2802008	Bolt M8×160	×	1
7	B97.1-10	Flat Washer M10	×	5
8	B6182-10	Locknut M10	×	32
9	5201083	Washer M10	×	2
10	5201081	Anti Scalp Roller	×	3
11	5201082	Scalp Roller Bushing	×	3
12	5201061	Disk Spring Washer M11	×	2
13	B5782-10100	Bolt M10×100	×	2
14	5202012	Hair Pin	×	7
15	B97.1-14	Washer M14	×	1
16	5001130	Front Suspension Bracket	×	1
17	B6182-8	Locknut M8	×	4
18	5001010	Front Deck Support Rod	×	1
19	5001011	Support Rod Pivot Bushing	×	1
20	5001012	Support Rod Spacer	×	1
21	B6182-14	Nut M14	×	1
22	5201291	Bearing Cover	×	2
23	5201012	Stationary Idler	×	2
24	B276-6203RS	Bearing 6203-2RS	×	4
25	B893.1-40	Snap Ring M40	×	3
26	5201011	Idler Spacer Bushing	×	2
27	5001005	Deck Stabilizer Rod	×	2
28	B97.1-12	Flat Washer M12	×	2
29	B5783-1030	Hex Hd. Bolt M10×30	×	4
30	5001100	Deck Lift Bracket	×	1
31	5001008	Deck lift Rod	×	2
32	5001006	Washer M12	×	2
33	5001083	Washer M10	×	1
34	3301003	Flange Bushing 20×26×25	×	2
35	B1152-6	Grease Fitting M6	×	1

REF.	PART NO.	DESCRIPTION	50	Quantity
36	5001081	Pivot Tensioner Mount	×	1
37	5207015	Deck Belt Tension Spring	×	1
38	B5787-1035	Bolt M10×35	×	18
39	5001017	LH Belt Cover	×	1
40	5001090	Deck Belt Tension Arm	×	1
41	5201077	Bearing Spacer	×	1
42	5201064	Tension Pulley	×	1
43	5201078	Bearing Spacer M10	×	1
44	5001082	Tension Pulley Brace	×	1
45	B5787-1025	Hex Hd. Bolt M10×25	×	2
46	5001002	Blade Drive Belt	×	1
47	5001040	Deck Weldment	×	1
48	B5787-10110	Bolt M10×110	×	1
49	B5787-1070	Hex Hd. Bolt M10×70	×	2
50	B801-825	Hex Hd. Bolt M8×25	×	4
51	B5787-10120	Hex Hd. Bolt M10×120	×	1
52	3602014	Deck Wheel Spacer	×	1
53	B6171-20	Nut M20×1.5	×	3
54	5201048	Disk Spring Washer M20	×	3
55	5001110	Blade Pulley	×	3
56	5201044	Top Dust Cover	×	3
57	B276-6205RS	Bearing 6205-2RS	×	6
58	5201049	Spindle Bearing Spacer	×	3
59	5201050	Spindle Housing	×	3
60	B893.1-52	Snap Ring M52	×	3
61	5201043	Lower Dust Guard	×	3
62	5001141	Spindle Shaft	×	3
63	B1096-B625	Key B6×25	×	3
64	5001001	Blade	×	3
65	5201042	Disk Spring Washer M16	×	3
66	B5785-161560	Bolt M16×1.5×60	×	3
67	5001140	Spindle Assembly	×	3
280	B6172-14	Nut M14	×	1
281	5201010	Tension Pulley Assembly	×	2
282	5001080	Tension Pulley Assembly Drive Belt	×	1

Front Frame Assembly

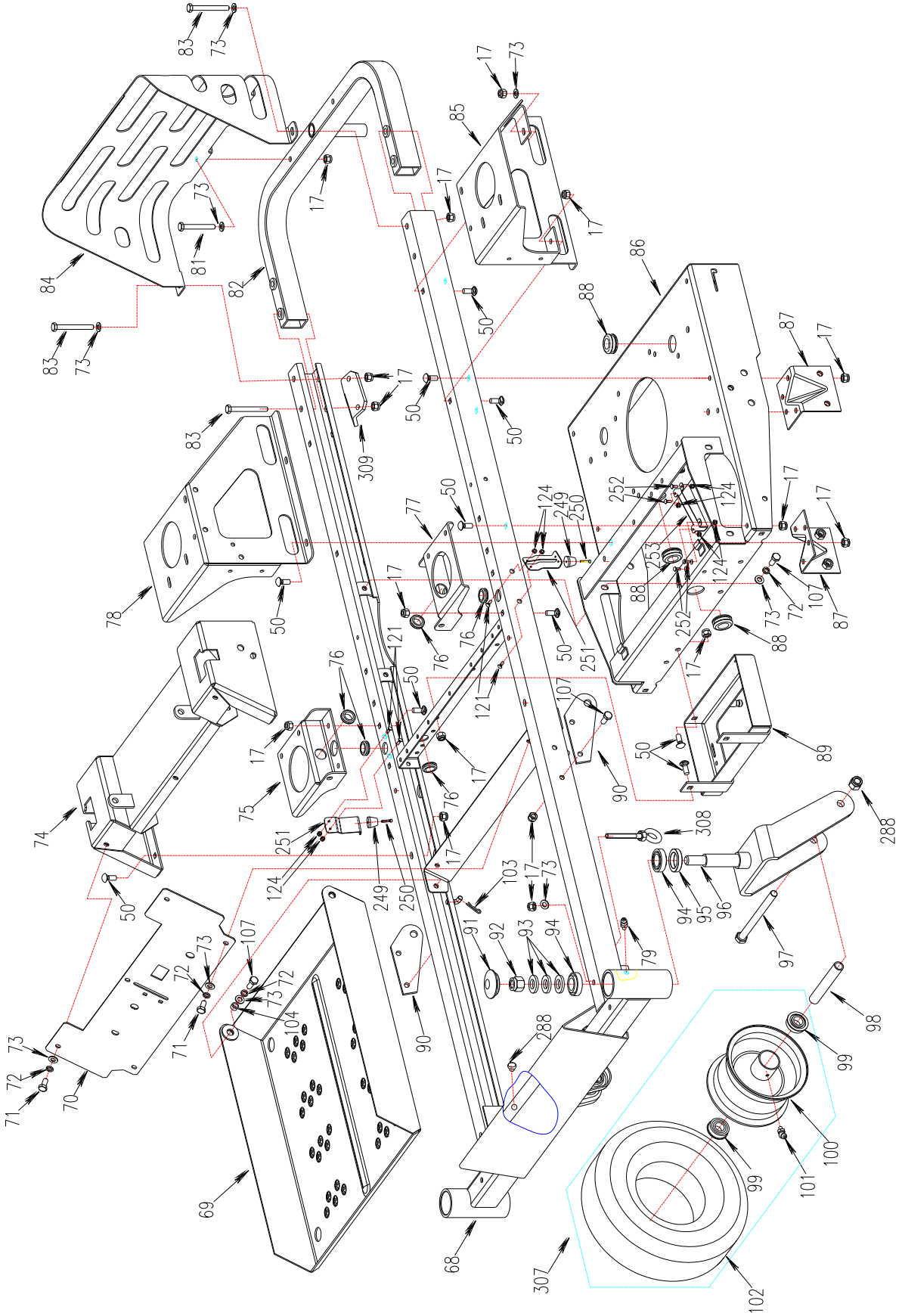

Front Frame Assembly

REF.	PART NO.	DESCRIPTION	46	50	Quantity
17	B6182-8	Locknut M8	×	×	34
50	B801-820	Hex Hd. Bolt M8×20	×	×	24
68	5002040	Main Frame	×	×	1
69	5002170	Foot Plate	×	×	1
70	5002006	Control Panel	×	×	1
71	B5783-816	Hex Hd. Bolt M8×16	×	×	5
72	B93-8	Split Lock Washer M8	×	×	7
73	B97.1-8	Flat Washer M8	×	×	13
74	5002070	Control Panel Mount	×	×	1
75	5002017	Front RH Tank Bracket	×	×	1
76	5002030	Rubber Bushing M20	×	×	5
77	5002016	Front LH Tank Bracket	×	×	1
78	5002019	Rear RH Tank Bracket	×	×	1
79	B1152-8	Grease Fitting M8×1	×	×	2
81	B5782-860	Hex Hd. Bolt M8×60	×	×	2
82	5002065	Bumper	×	×	1
83	B5782-870	Bolt M8×70	×	×	4
84	5002029	Rear Engine Guard (B&S)	×	×	1
	5002029A	Rear Engine Guard (Kawa)	×	×	1
85	5002018	Rear LH Tank Bracket	×	×	1
86	5002060	Engine Base	×	×	1
87	5002085	Frame Brace	×	×	2
88	4LZ2.16.4-04	Rubber Bushing M29	×	×	3
89	5002055	Battery Tray	×	×	1
90	5002002	Stabilizer Arm Mount	×	×	2
91	5002020	Caster Pivot Cap	×	×	2

REF.	PART NO.	DESCRIPTION	46	50	Quantity
92	B6182-16	Nut M16	×	×	2
93	5002091	Spring washer M16	×	×	6
94	B297-32922	Bearing 329/22	×	×	4
95	B9877.1-28407	Grease Seal 28×40×7	×	×	2
96	5002095	Caster Wheel Yoke	×	×	2
97	B5782-12150	Bolt M12×150	×	×	2
98	5002092	Caster Wheel Bushing	×	×	2
99	5002103	Bearing	×	×	4
100	5002102	Rim 5×3	×	×	2
101	B1153-645	45°Grease Fitting M6	×	×	2
102	5002101	Tire 11×4	×	×	2
103	XSZ56-1-17	Hair Pin	×	×	2
104	5002007	Foot Plate Pivot Bushing	×	×	2
107	B5783-825	Bolt M8×25	×	×	6
121	B801-616	Bolt M6×16	×	×	2
124	B6182-6	Locknut M6	×	×	10
249	5201003	Bumper Block	×	×	2
250	B70-630	Screw M6×30	×	×	2
251	5002261	Deck Stop	×	×	2
252	B818-620	Bolt M6×20	×	×	4
253	5002265	Safety Guard	×	×	1
288	B6182-12	Nut M12	×	×	2
307	5002100	Front Wheel	×	×	2
308	5009027	Pull Ring	×	×	2
309	5009026	Fixed Plate	×	×	2

Control Assembly

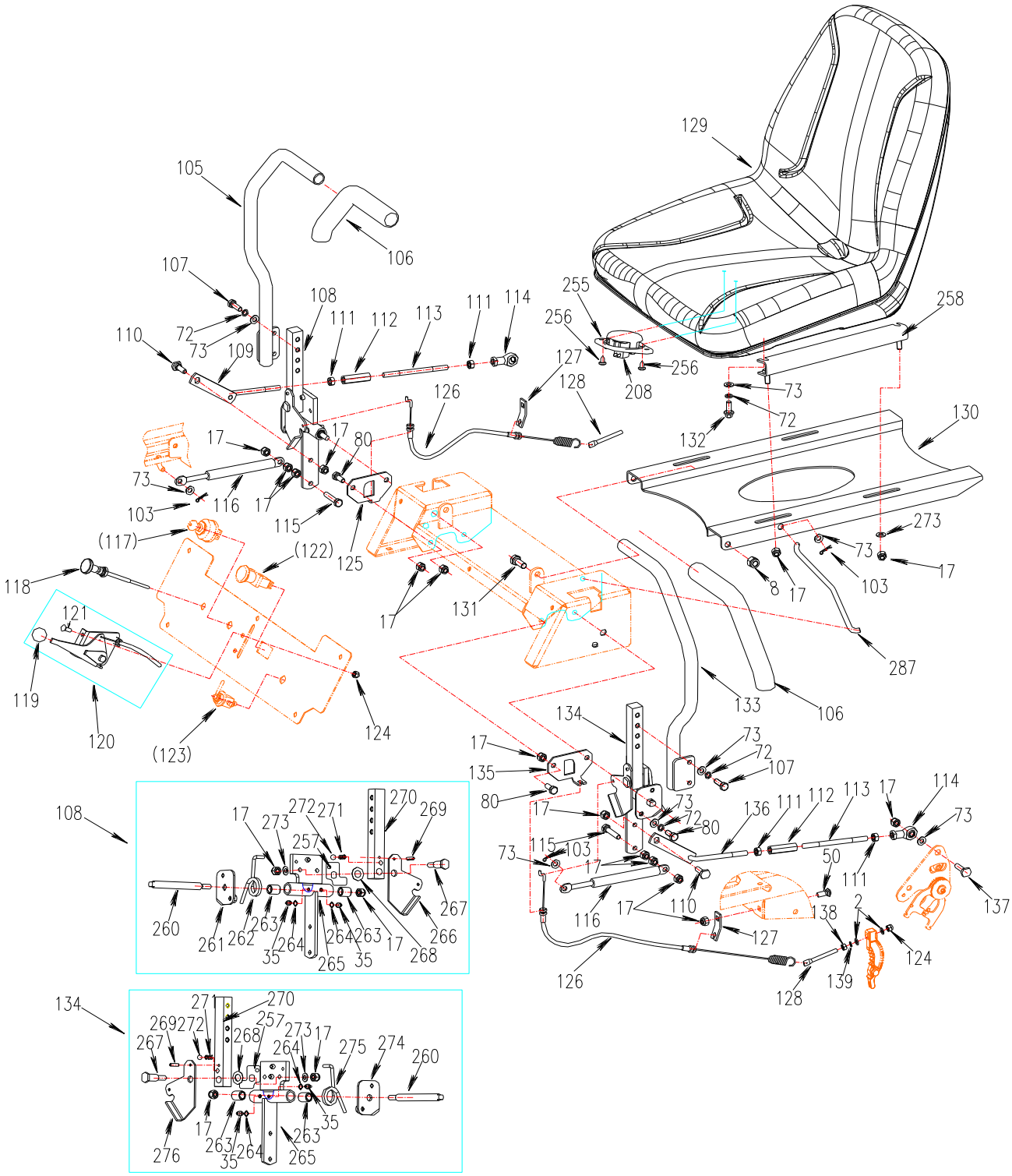

Control Assembly

REF.	PART NO.	DESCRIPTION	46	50	Quantity
2	B97.1-6	Flat Washer M6	×	×	4
8	B6182-10	Locknut M10	×	×	2
17	B6182-8	Locknut M8	×	×	20
35	B1152-6	Grease Fitting M6	×	×	4
50	B801-820	Hex Hd. Bolt M8×20	×	×	2
72	B93-8	Split Lock Washer M8	×	×	4
73	B97.1-8	Flat Washer M8	×	×	14
80	B5783-820	Hex Hd. Bolt M8×20	×	×	2
105	5002145A	Right Handle	×	×	1
106	5002034	Handle Grip	×	×	2
107	B5783-825	Hex Hd. Bolt M8×25	×	×	4
108	5002119	RH Handle Mount Assembly	×	×	1
109	5002138	RH Control link	×	×	1
110	5002008	Shoulder Pin	×	×	2
111	B6170-8	Locknut M8	×	×	4
112	5002134	Neutral Buckle M8	×	×	2
113	5002135	Screw M8	×	×	2
114	SIBJK 8T	Ball Joint	×	×	2
115	B5783-840	Hex Hd. Bolt M8×40	×	×	2
116	5205012	Damper	×	×	2
（117）	5208003	Ignition Switch	×	×	
118	5002220	Choke Cable	×	×	1
119	3306030	Throttle Control Knob	×	×	1
120	3336019	Throttle Control Assembly	×	×	1
121	B801-616	Bolt M6×16	×	×	2
（122）	5208022	PTO Switch	×	×	
（123）	5204015A	Three Way Valve	×	×	
124	B6182-6	Locknut M6	×	×	4
125	5002031	Right Switch Bracket	×	×	1
126	5002210	Brake Cable	×	×	2
127	5002005	Cable Mount Bracket	×	×	2
128	5002026	Brake Adjustment Link	×	×	2
129	5000091	Seat	×	×	1

REF.	PART NO.	DESCRIPTION	46	50	Quantity
130	5000081A	Seat Plate	×	×	1
131	B5783-1025	Bolt M10×25	×	×	2
132	3300106	Hex Hd Bolt 5/16-18UNC	×	×	4
133	5002140A	Left Handle	×	×	1
134	5002110	LH Handle Mount Assembly	×	×	1
135	5002032	Left Switch Bracket	×	×	1
136	5002131	Left Control Link	×	×	1
137	5002009	Axle Pin 2	×	×	2
138	B6170-6	Nut M6	×	×	4
139	B93-6	Split Lock Washer M6	×	×	2
208	5008003	Plunger Switch	×	×	1
255	5000016A	Seat Switch	×	×	1
256	B845-ST6312	Screw ST6.3×12	×	×	2
257	5002270	Washer	×	×	2
258	5000083	Seat Rail	×	×	2
260	5002111	Pivot Shaft	×	×	2
261	5002129	Stop Bracket RH Torsion Spring	×	×	1
262	5002118	Torsion Spring, RH	×	×	1
263	B2685-121618	Bearing 12×16×18	×	×	4
264	B861.1-6	Washer M6	×	×	4
265	5002120	Pivot Block Weldment	×	×	2
266	5002116	Right Brake Panel	×	×	1
267	5002112	Operating Pin Roll	×	×	2
268	2806061	Washer M12	×	×	2
269	B897-520	Pin 5×20	×	×	2
270	5002113	Handle Mount Block	×	×	2
271	5002114	Spring	×	×	2
272	B308-4	Steel Ball SR4	×	×	2
273	2800006	Washer M8	×	×	6
274	5002125	Stop Bracket LH Torsion Spring	×	×	1
275	5002117	Torsion Spring, LH	×	×	1
276	5002115	Left Brake Panel	×	×	1
287	5000002	Seat Pull Rod	×	×	1

Engine Assembly

LIMITED RUN 24HP B&S ENGINE HAD A 1&1/8" CRANKSHAFT.
PULLEY 353201
PTO CLUTCH 353202

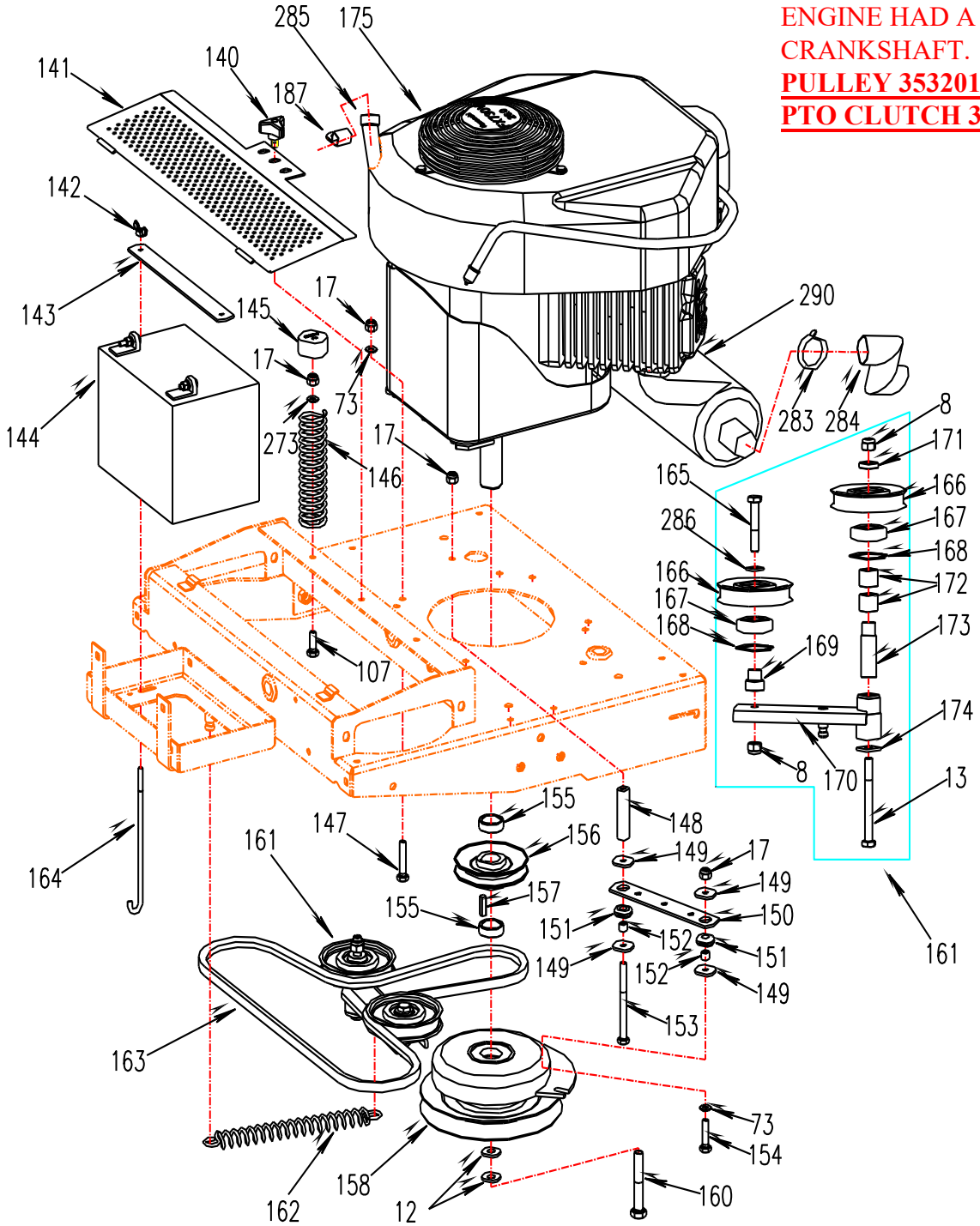

Engine Assembly

REF.	PART NO.	DESCRIPTION	46	50	Quantity
8	B6182-10	Locknut M10	×	×	2
13	B5782-10100	Bolt M10×100	×	×	1
17	B6182-8	Locknut M8	×	×	8
73	B97.1-8	Flat Washer M8	×	×	5
107	B5783-825	Hex Hd Bolt M8×25	×	×	2
140	3302190	Three Arm Knob	×	×	1
141	5002195	Fan Cover	×	×	1
142	B62-6	Wing Nut M6	×	×	2
143	3203004	Battery Strap	×	×	1
144	5208002	Battery 12V 33AH	×	×	1
145	5203045	Spring Cap	×	×	2
146	5002022	Spring	×	×	2
147	B5783-845	Bolt M8×45	×	×	4
148	5002159	Clutch Stop Spacer	×	×	1
149	5203408	Washer M8	×	×	4
150	5203411	Clutch Stop Strap	×	×	1
151	5203410	Rubber Washer M17	×	×	2
152	5203409	Clutch Stop Spacer	×	×	2
153	B5782-8100	Bolt M8×100	×	×	1
154	B5783-835	Hex Hd Bolt M8×35	×	×	1
155	3607002	Engine Shaft Spacer	×	×	2
156	5002152	Pump Drive Pulley	×	×	1
157	5203405	Key 6.35×25	×	×	1
158	4804005	Electric Clutch	×	×	1
12	5201061	Washer	×	×	2

REF.	PART NO.	DESCRIPTION	46	50	Quantity
160	5203412	Bolt 7/16-20UNF×3	×	×	1
161	5002160	Tension Pulley Assembly	×	×	1
162	4806004	Tension Pulley Spring	×	×	1
163	5002004	Pump Drive Belt	×	×	1
164	5208203	Battery Clamp Bolt	×	×	2
165	B5782-1060	Bolt M10×60	×	×	1
166	5002175	Tension Idler	×	×	2
167	B276-6303RS	Bearing 6303-2RS	×	×	2
168	B893.2-47	Snap Ring M47	×	×	2
169	5002161	Tension Pulley Spacer	×	×	1
170	5002165	Pump Tension Arm	×	×	1
171	5002164	Tension Idler Spacer M10	×	×	1
172	B2685-202420	Bearing 20×24×20	×	×	2
173	5002163	Pivot Bushing	×	×	1
174	3307004	Washer M11	×	×	1
175		Kawasaki Engine	×	×	1
		BS Engine	×	×	1
187	3601020	Wire Clamp（Kawasaki）	×	×	1
273	2800006	Washer M8	×	×	2
283	B8870-50	Hose clamp 32-50	×	×	1
284	5002240	Muffler Adaptor (B&S)	×	×	1
285	5203420	Oil Drain Pipe (Kawa)	×	×	1
286	3302058	Washer M10	×	×	1
290	5002268	Muffler (Kawasaki FR)	×	×	1

Driving System

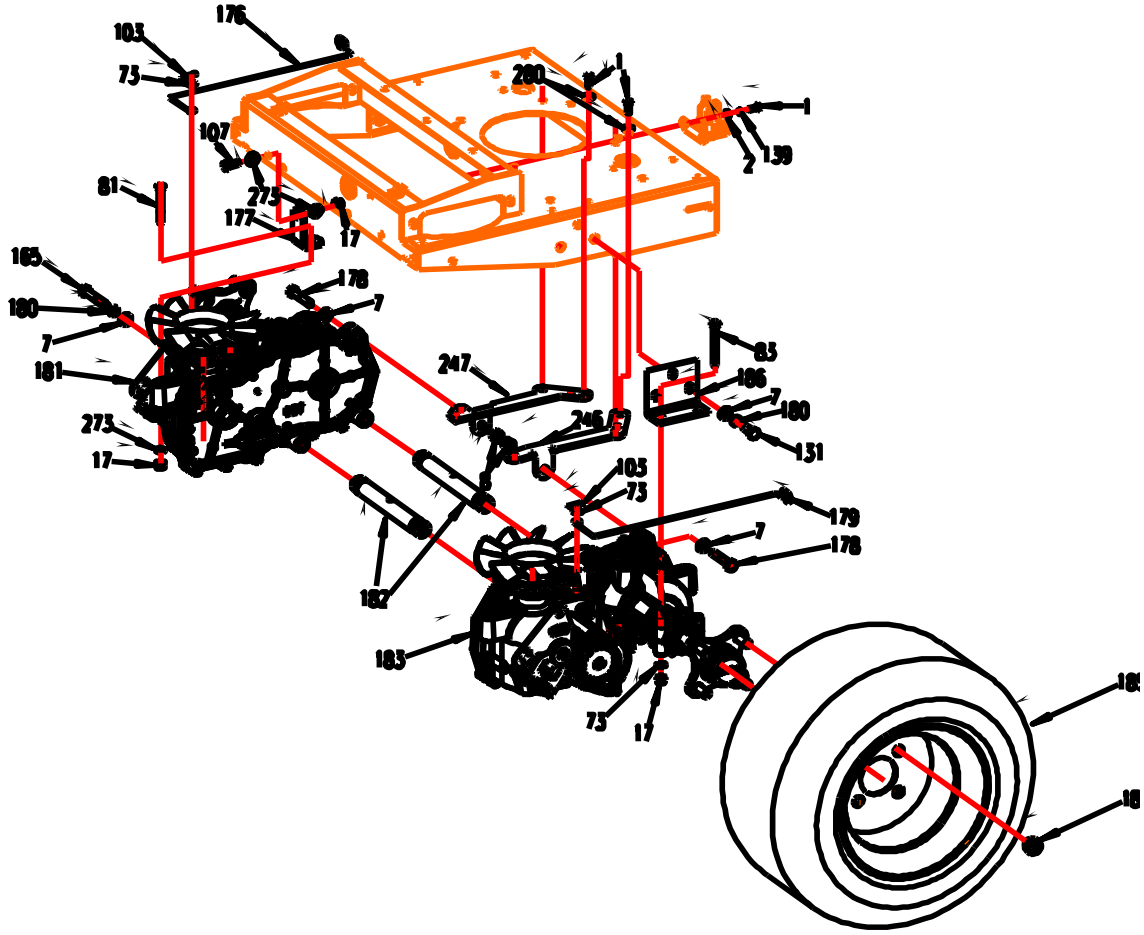

REF.	PART NO.	DESCRIPTION	46	50	Quantity
1	B5783-616	Hex Hd Bolt M6×16	×	×	4
2	B97.1-6	Flat Washer M6	×	×	2
7	B97.1-10	Flat Washer M10	×	×	12
17	B6182-8	Locknut M8	×	×	4
73	B97.1-8	Flat Washer M8	×	×	4
81	B5782-860	Hex Hd Bolt M8×60	×	×	2
83	B5782-870	Bolt M8×70	×	×	4
103	XSZ56-1-17	Hair Pin	×	×	2
107	B5783-825	Bolt M8×25	×	×	2
131	B5783-1025	Bolt M10×25	×	×	6
139	B93-6	Split Lock Washer M6	×	×	2
165	B5782-1060	Bolt M10×60	×	×	4
176	5002024	Right Pressure Relief Rod	×	×	1
177	5002012	Fixed Plate, Front	×	×	2

REF.	PART NO.	DESCRIPTION	46	50	Quantity
178	B5782-1050	Bolt M10×50	×	×	2
179	5002023	Left Pressure Relief Rod	×	×	1
180	B93-10	Washer M10	×	×	10
181	5002011	Right Drive Axle	×	×	1
182	5002080	Axle Weldment	×	×	2
183	5002010	Left Drive Axle	×	×	1
184	5000001	Nut 1/2-20UNF	×	×	8
185	5000050	Tire 18×9.5-8	×	×	2
186	5002013	Outer Axle Mounting Bracket	×	×	2
246	5002014	Left Inner Axle Mounting Bracket	×	×	1
247	5002015	Right Inner Axle Mounting Bracket	×	×	1
273	2800006	Washer	×	×	6
280	2802183	Washer M6	×	×	2

Mower Deck Height Adjustment

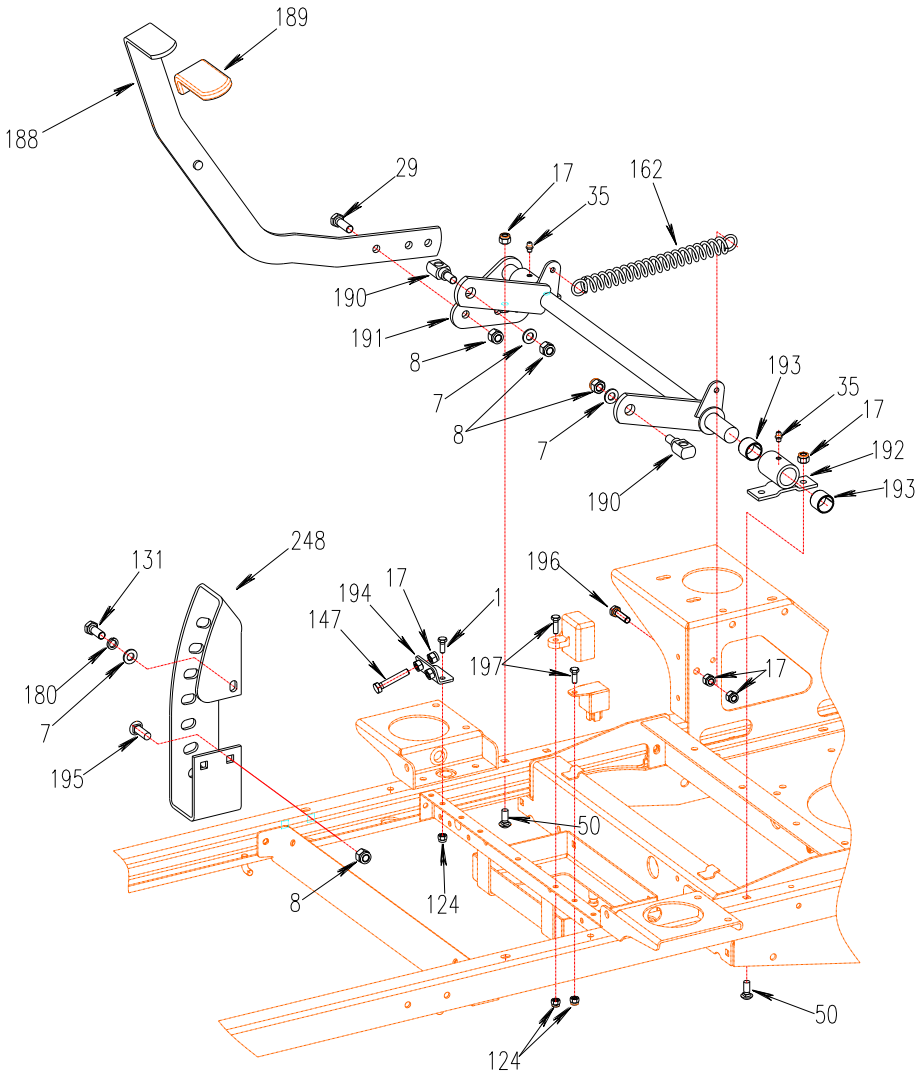

REF.	PART NO.	DESCRIPTION	46	50	Quantity
1	B5783-616	Hex Hd Bolt M6×16	×	×	4
7	B97.1-10	Flat Washer M10	×	×	5
8	B6182-10	Locknut M10	×	×	6
17	B6182-8	Locknut M8	×	×	10
29	B5783-1030	Hex Hd Bolt M10×30	×	×	2
35	B1152-6	Grease Fitting M6	×	×	2
50	B801-820	Hex Hd Bolt M8×20	×	×	4
124	B6182-6	Locknut M6	×	×	6
131	B5783-1025	Bolt M10×25	×	×	1
147	B5783-845	Bolt M8×45	×	×	2
162	4806004	Deck Lift Assist Spring	×	×	2
180	B93-10	Washer 10	×	×	1

REF.	PART NO.	DESCRIPTION	46	50	Quantity
188	5002190	Lift Lever	×	×	1
189	5002025	Handle Grip	×	×	1
190	5002001	Swivel	×	×	2
191	5002180	Deck Lift Shaft Weldment	×	×	1
192	5002185	Lift Shaft Mount	×	×	1
193	B12613-252220	Bushing 25×22×20	×	×	4
194	5002250	Tracking Plate	×	×	2
195	B801-1030	Bolt M10×30	×	×	2
196	B5783-830	Bolt M8×30	×	×	2
197	B5783-620	Hex Hd Bolt M6×20	×	×	2
248	5002021	Cutting Height Bracket		×	1
	4602021	Cutting Height Bracket	×		1

Fuel Tank Assembly 1

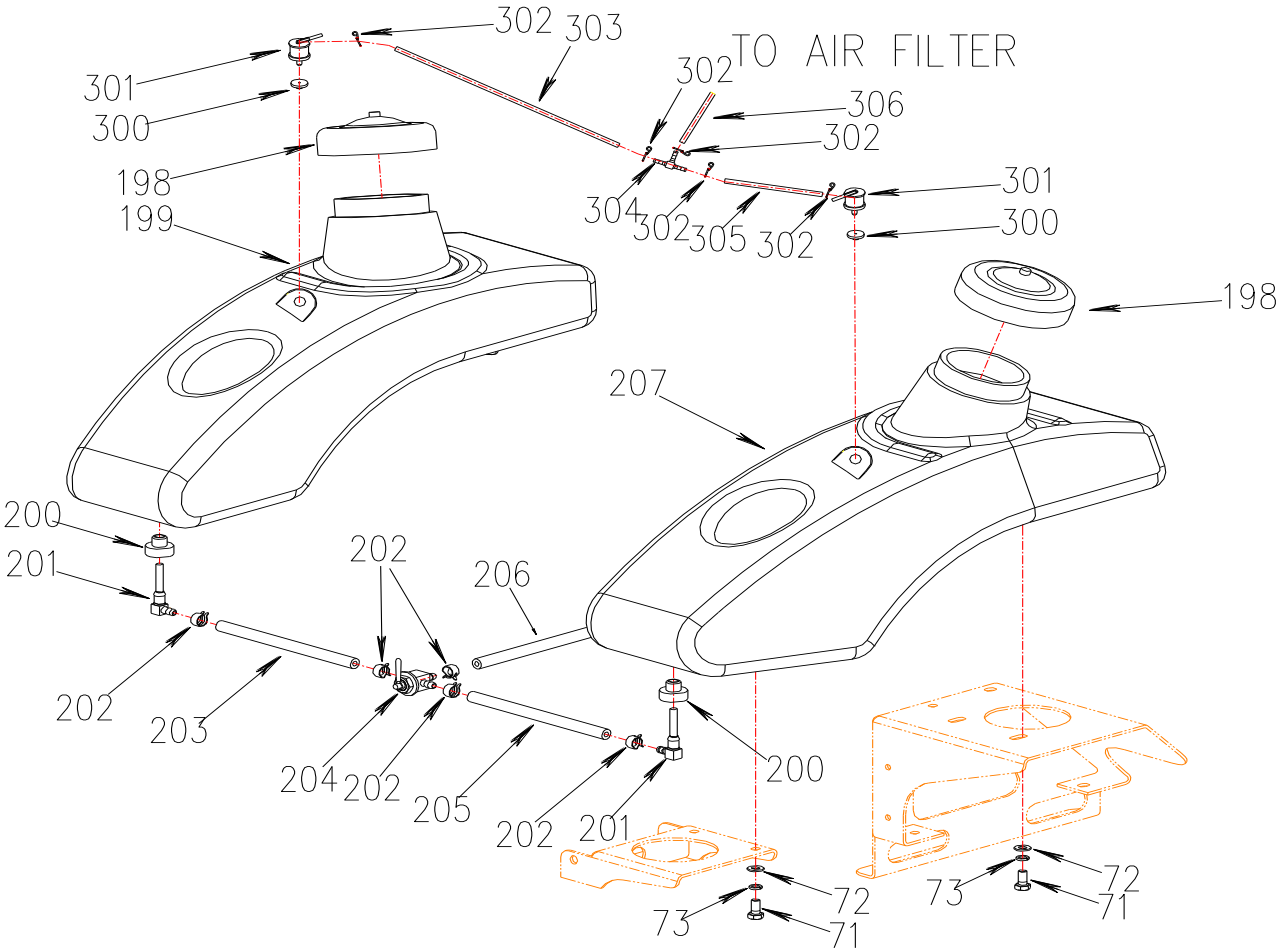

REF.	PART NO.	DESCRIPTION	46	50	Quantity
71	B5783-816	Hex Hd Bolt M8×16	×	×	8
72	B93-8	Flat Washer M8	×	×	8
73	B97.1-8	Lock Washer M8	×	×	8
198	5204019	Fuel Tank Cap	×	×	2
199	5000101E	Right Fuel Tank	×	×	1
200	3307023B	Grommet	×	×	2
201	5204016	Right-Angle Connector	×	×	2
202	B8870-16	Hose Clamp 10-16	×	×	6
203	5000104E	Fuel Line 750	×	×	1
204	5204015A	3-Way Valve	×	×	1
205	5000103E	Fuel Line 450	×	×	1

REF.	PART NO.	DESCRIPTION	46	50	Quantity
206	5000105E	Fuel Line 1150 （B&S）	×	×	1
	5000106E	Fuel Line 1470 (Kawasaki)	×	×	1
207	5000102E	Left Fuel Tank	×	×	1
300	2807102	Rubber Grommet	×	×	2
301	2807101	Roll-Over Valve Vent	×	×	2
302	3307041	Clamp	×	×	6
303	5000112	Fuel Line 500（φ8.5×2）	×	×	1
304	5204010	Adaptor	×	×	1
305	5000111	Fuel Line 760（φ8.5×2）	×	×	1
306	5000113	Fuel Line 580（φ8.5×2）	×	×	1
	5000116	Fuel Line 680（φ8.5×2）	×	×	1

Fuel Tank Assembly 2

Some machines are equipped with Fuel Tank Assembly 2

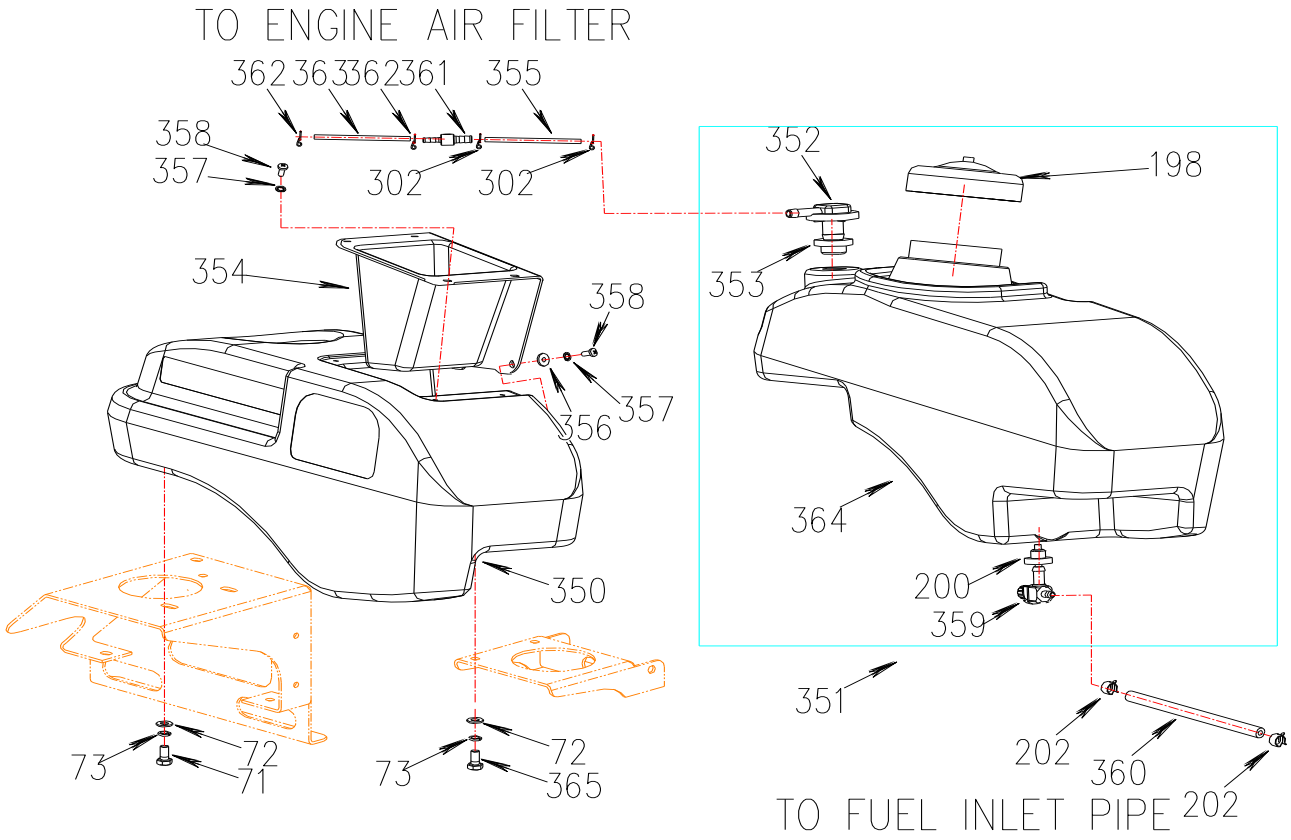

REF.	PART NO.	DESCRIPTION	46	50	Quantity
72	B93-8	Flat Washer M8	×	×	8
73	B97.1-8	Lock Washer M8	×	×	8
198	5204019	Fuel Tank Cap	×	×	1
200	3307023B	Grommet	×	×	1
202	B8870-16	Hose Clamp 10-16	×	×	2
302	12105-1P68F5-0000	Flexible Clamp	×	×	2
350	5000124	Right Fender	×	×	1
351	5000121	Left Fuel Tank Assembly	×	×	1
352	363411	Vent Valve	×	×	1
353	363412	Vent Grommet	×	×	1
354	5000128	Storage Tray	×	×	1

REF.	PART NO.	DESCRIPTION	46	50	Quantity
355	5000140	Fuel Line (Φ8.5×2)	×	×	1
356	5204044	Washer	×	×	2
357	B861.1-5	Washer M5	×	×	6
358	5000129	British Bolt 10-24UNC×1/2	×	×	6
359	393044	Right-angle Switch Valve	×	×	1
360	5000141	Fuel Line	×	×	1
361	5000130	Adaptor	×	×	1
362	3307041	Clamp	×	×	2
363	5000142	Fuel Line	×	×	1
364	5000123	Left Fuel Tank	×	×	1
365	4802012	British Bolt 5/16-18UNC	×	×	8

Decals

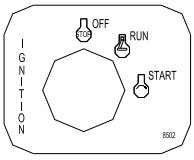

220

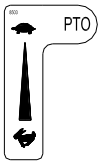

221

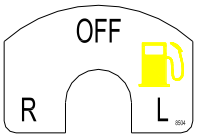

222

223

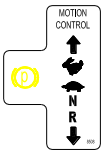

233

236

245

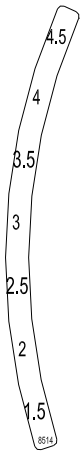

227

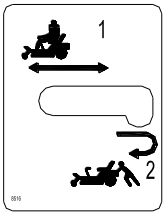

229

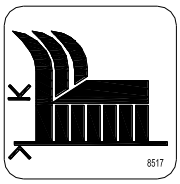

228

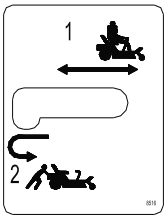

230

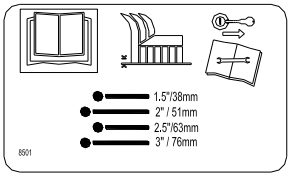

239

⚠ CAUTION

MUFFLER AND SHIELDS MAY EXCEED 150°F

232

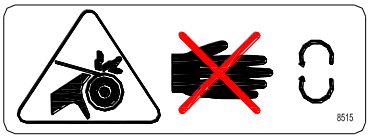

238

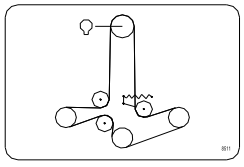

241

⚠ CAUTION

DO NOT OPERATE WITHOUT GUARD IN PLACE

225

240

235

⚠ WARNING

DO NOT OPERATE WITHOUT DISCHARGE DEFLECTOR, ENTIRE GRASS COLLECTION SYSTEM, OR MULCH KIT IN PLACE. DO NOT REMOVE GRASS CATCHER UNTIL BLADES HAVE STOPPED.

234

224

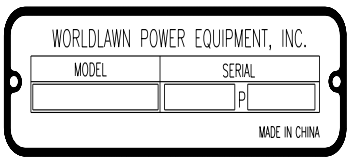

231

226

⚠ CAUTION

- Loose or Damaged Blade Bolt may allow blade to come out from under deck at HIGH SPEED.
- Replace Blade Bolt after striking a foreign object.
- Torque Blade Bolt to 115-120 FT-LBS(158-163N m).

SEE OPERATOR'S MANUAL

242

⚠ DANGER

COVER IS MISSING. DO NOT OPERATE THIS UNIT WHEN COVER IS NOT IN PLACE.

243

Worldlawn Power Equipment

244

⚠ DANGER

To avoid serious injury or death:
- Avoid blades unless engine and blades are stopped.

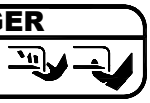

237

Decals

402	401	403
404		

REF.	PART NO.	DESCRIPTION	46	50	Quantity
220	8502	Ignition Switch Decal	×	×	1
221	8503	PTO Run Stop Decal	×	×	1
222	8504	Fuel Valve Decal	×	×	1
223	8507	Choke Decal	×	×	1
224	8500	Viper Logo	×	×	1
225	8303	Caution Guard	×	×	1
226	8375	WORLD Logo	×	×	2
227	8514	Cutting Height Inner	×	×	1
228	8517	Cutting Height Locator	×	×	1
229	8516	Transaxle Release LH	×	×	1
230	8518	Transaxle Release RH	×	×	1
231	8046	Serial Plate	×	×	1
232	8318	Rear Guard	×	×	1
233	8508	Motion Control LH	×	×	1
234	8307	Discharge Warning	×	×	1

REF.	PART NO.	DESCRIPTION	46	50	Quantity
235	8519	Operational Warning	×	×	1
236	8512	Motion Control RH	×	×	1
237	8325	Danger Blades	×	×	2
238	8515	Rotating Parts	×	×	2
239	8501	International Logo	×	×	1
240	8513	Decal 50″		×	1
241	8511	Deck Belt Routing	×	×	1
242	8308	Shield Warning	×	×	1
243	8305	Danger Foot Plate	×	×	2
244	8341	Worldlawn logo	×	×	1
245	8510	Cutting Height Outer	×	×	1
401	8602	EPA Label	×	×	1
402	8606	Decal 46″	×		1
403	8607	Decal，46″	×		1
404	8506	Decal，50″		×	1

Electrical System

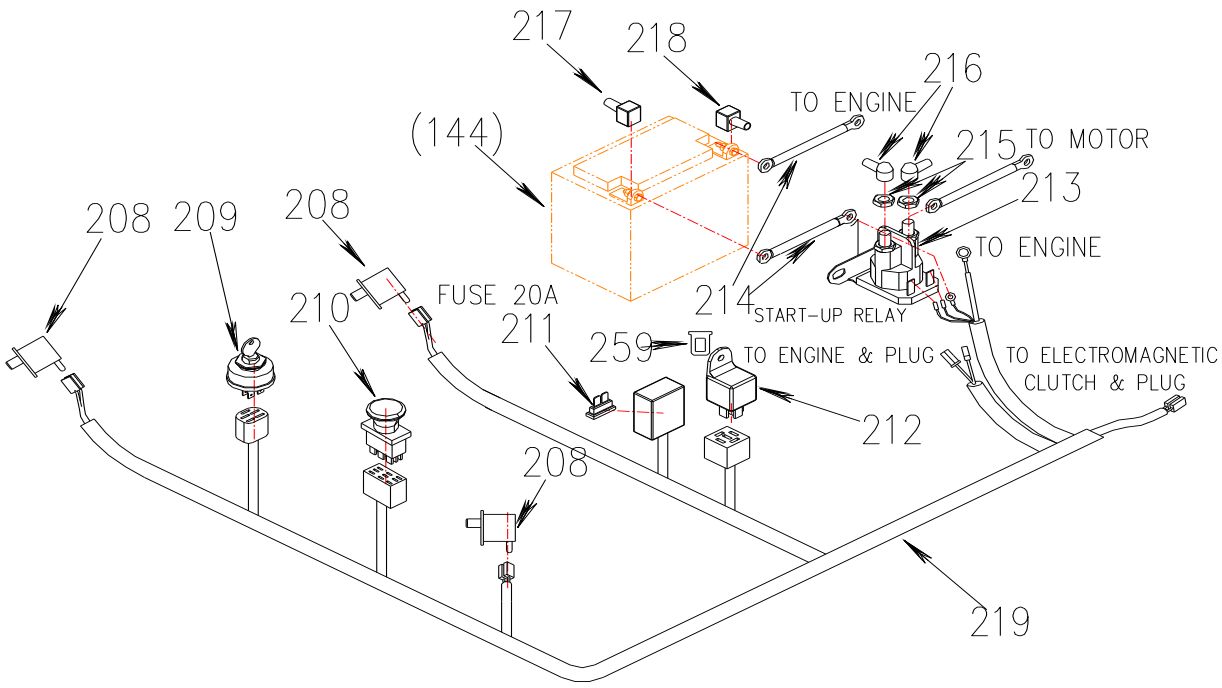

REF.	PART NO.	DESCRIPTION	46	50	Quantity
208	5008003	Switch (Normal Open)	×	×	3
209	5208003	Ignition Switch	×	×	1
210	5208022	PTO Switch	×	×	1
211	5208007	Fuse 20A	×	×	4
212	5208011	Relay 12V	×	×	1
213	5208043	Starter Relay	×	×	1
214	5208004	Battery Cables（+550）	×	×	2
215	5008005	Nut 5/16-24UNF	×	×	2

REF.	PART NO.	DESCRIPTION	46	50	Quantity
216	2808107	Relay Cable Cover	×	×	2
217	3312032	Cover (positive)	×	×	1
218	3312031	Cover (negative)	×	×	1
219	5008001	Wiring Harness (B&S)	×	×	1
	5008009	Wiring Harness (Kawasaki)	×	×	1
259	5008012	Relay	×	×	1
（144）	5208002	Battery 12V 33AH	×	×	1